SIZE: 80x80x25mm

Bearing Type:

Ball / Sleeve Bearing

Leader Wire Or Terminal Is Available

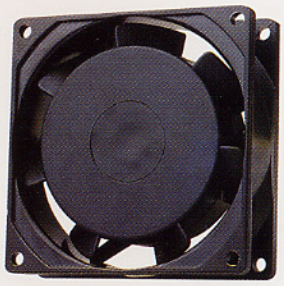

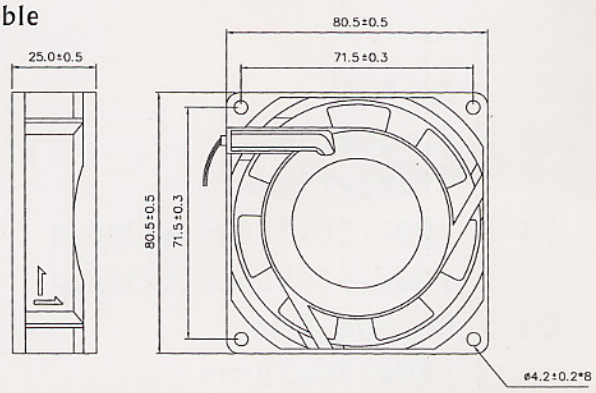

Specifications

Specifications are subject to change without notice

Model No.	Bearing	Rated Voltage Vac	Frequency Hz	Max. Rated Current mA	Max. Input Power W	Speed R.P.M.	Max. Air Flow CFM	Max. Air Pressure mmH₂O	Max. Air Pressure IN H₂O	Noise dB-A
8P115HST 8P115HSW	Sleeve	115	50/60	150/140	16/14	2500/3000	21/24	2.20/3.20	0.09/0.13	31/35
8P115HBT	Ball									
8P230HST 8P230HSW	Sleeve	230	50/60	95/85	18/16	2500/3000	21/24	2.20/3.20	0.09/0.13	31/35
8P230HBT	Ball									

SIZE: 92x92x25mm

Bearing Type:

Ball / Sleeve Bearing

Leader Wire Or Terminal Is Available

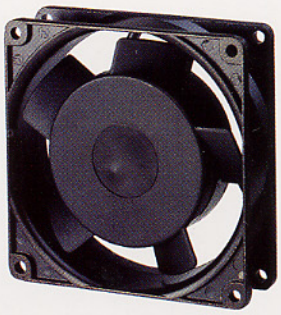

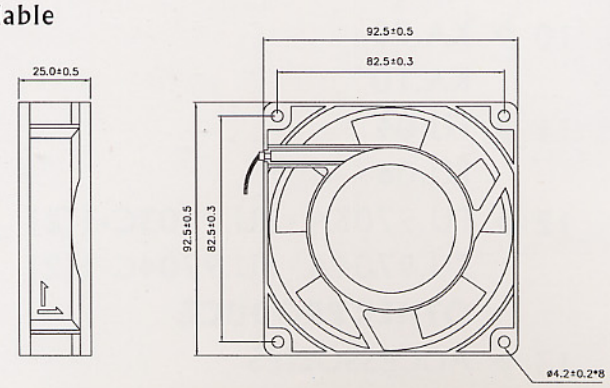

Specifications

Specifications are subject to change without notice

Model No.	Bearing	Rated Voltage Vac	Frequency Hz	Max. Rated Current mA	Max. Input Power W	Speed R.P.M.	Max. Air Flow CFM	Max. Air Pressure mmH₂O	Max. Air Pressure IN H₂O	Noise dB-A
9P115HST 9P115HSW	Sleeve	115	50/60	160/140	16/14	2400/2900	28/34	2.96/4.21	0.12/0.17	35/41
9P115HBT	Ball									
9P230HST 9P230HSW	Sleeve	230	50/60	80/70	16/14	2400/2900	28/34	2.96/4.21	0.12/0.17	35/41
9P230HBT	Ball									